# DIMENSIONI D'INGOMBRO – OVERALL DIMENSIONS – DIMENSIONS D'ENCOMBREMENT
# RAUMBEDARF – DIMENSIONES TOTALES – DIMENSÕES

**EL1707 – EL1708**
**EL1510 – EL1513**
**EH1708 – EH1710**
**EH1711 – EH1713**

**COD. DIS. 60.9610.00**

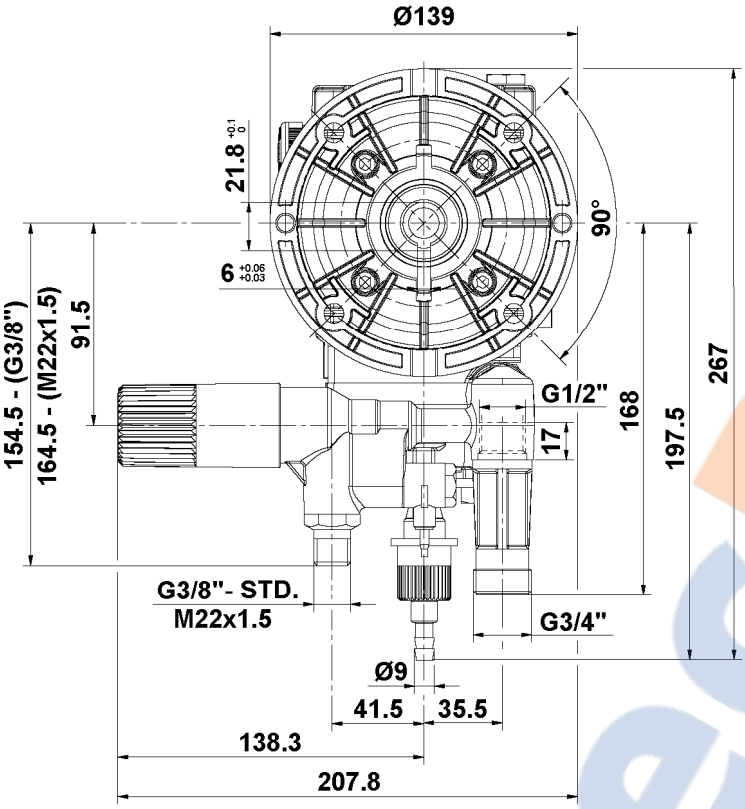


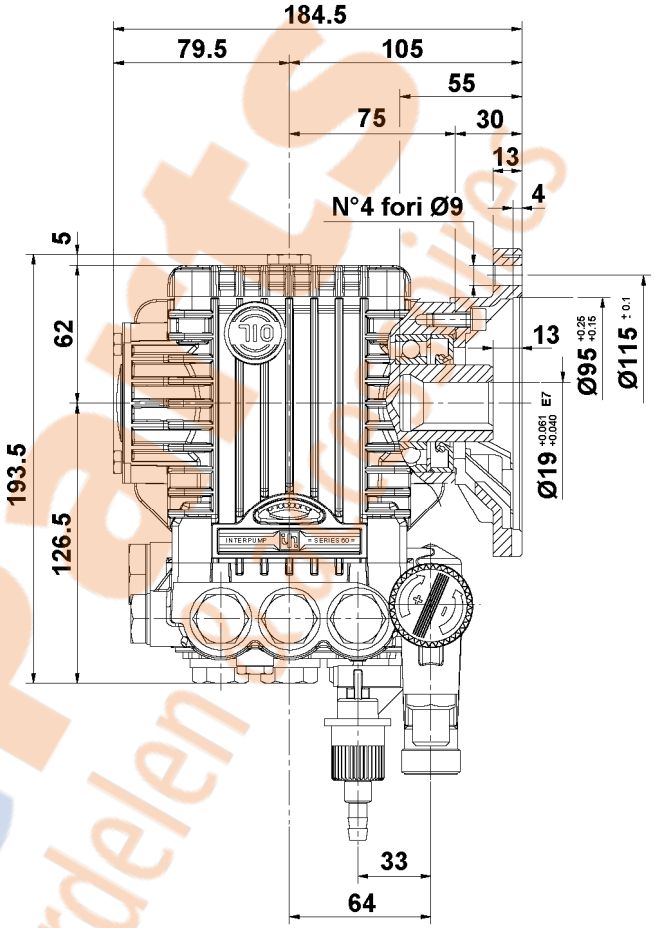


**B – VH VALVE**

**UH1708 – UH1711**
**UH1712 – UH1713**

**COD. DIS. 60.9611.00**

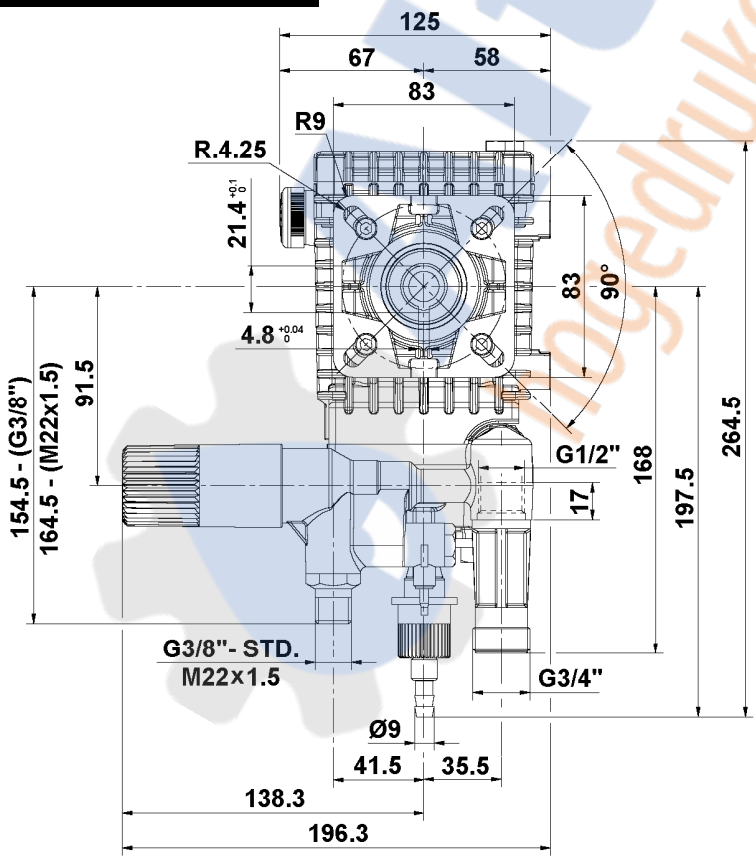


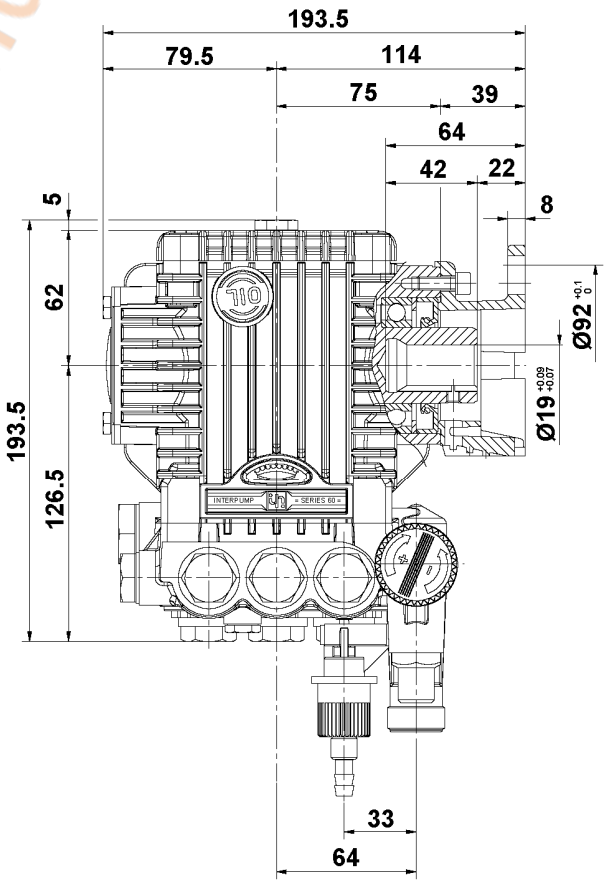


**C – VH VALVE**

AltecParts Ingedrukonderdelen & Accessories